OUTPUT SHAFT GROUP

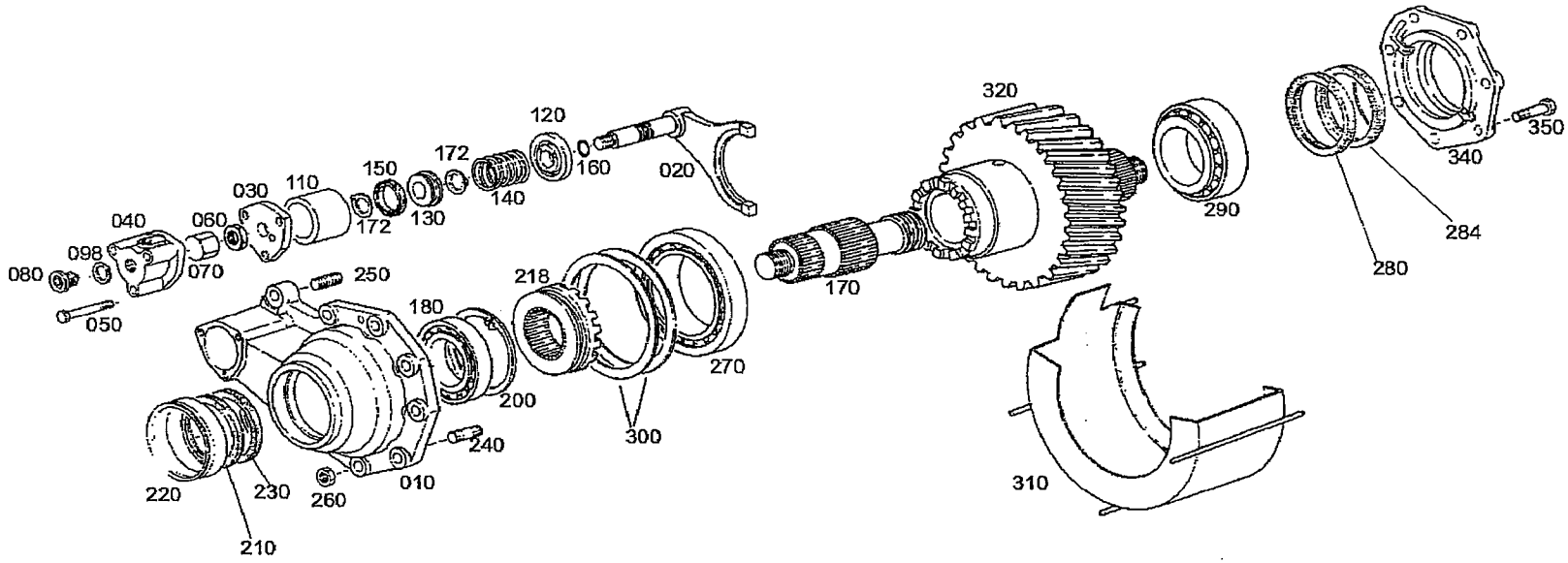

Marmon-Herrington

AM 01/11